J.M.WILLIAMS and ASSOCIATES, Inc.

STRUCTURAL ENGINEERING THAT'S RELIABLE

SALT LAKE CITY OFFICE:
2875 SOUTH DECKER LAKE DRIVE
SUITE 275
S.L.C., UTAH 84119
PHONE: 801.575.6455
FAX: 801.575.6456
EMAIL: james@jmwa.com
JMWA.COM

LICENSED IN:
ARIZONA
CALIFORINA
COLORADO
FLORIDA
HAWAII
IDAHO
NEW MEXICO
NEVADA
NORTH CAROLINA
OREGON
TEXAS
UTAH
VIRGINIA
WASHINGTON
WYOMING

STRUCTURAL CALCULATIONS
for the

Snap Sport - Light System Foundation

May 20, 2009

STATE OF TEXAS
JAMES M. WILLIAMS
79578
REGISTERED PROFESSIONAL ENGINEER

5/20/09

for

Snap Sport
& Chris Halley

JMWA # 09028

DESIGN CRITERIA:

WIND	=	110 MPH, EXP. "C"
ALLOWABLE LATERAL BEARING PRESSURE	=	250 psf
CONCRETE (f'c)	=	3000 psi
REINFORCING STEEL (fy)	=	60 ksi

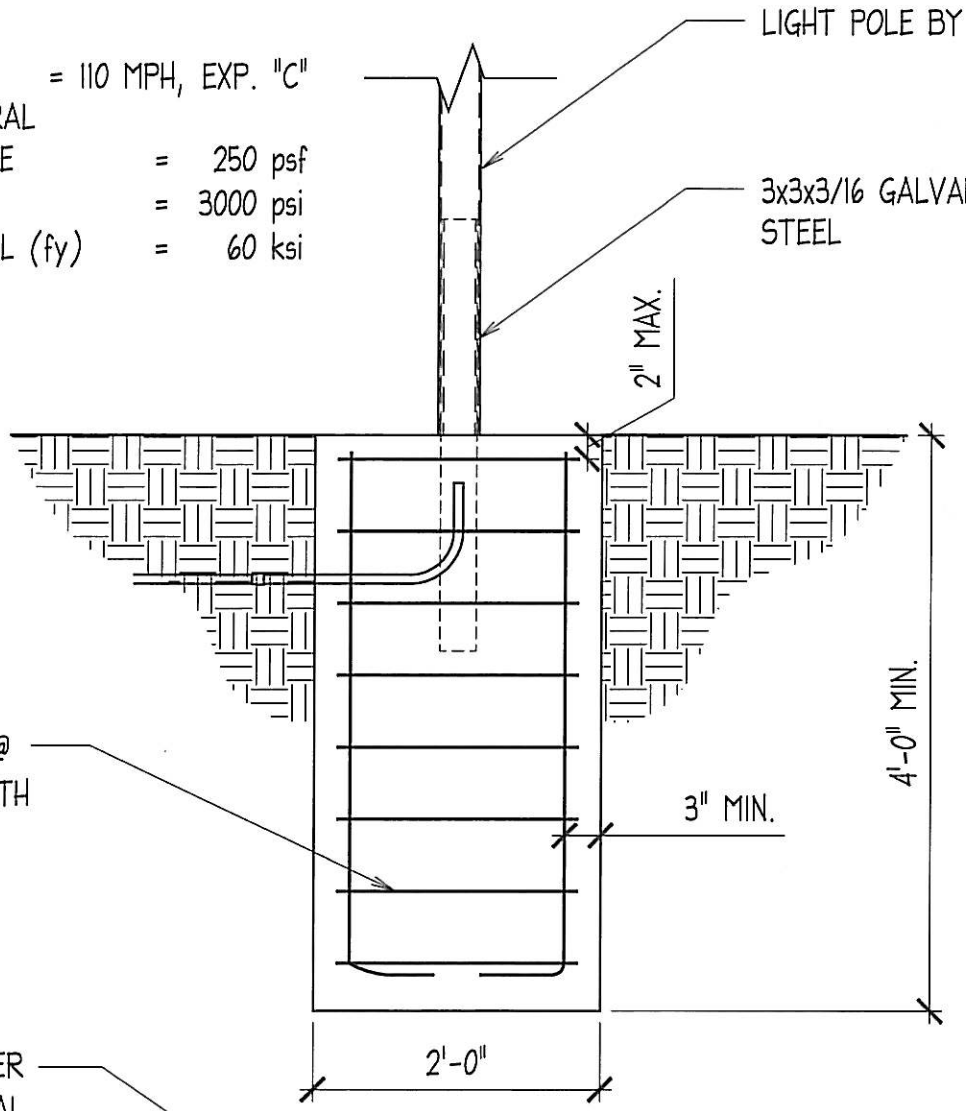

24"ϕ CONCRETE PIER W/ (4) #5 VERTICAL BARS

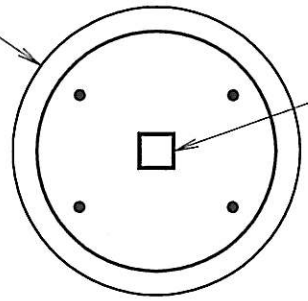

NOTE:
SEE MANUFACTURER'S INSTALLATION GUIDE FOR ADDITIONAL INFORMATION

1 / LPF

LIGHT POLE FOOTING

SCALE: 3/4" = 1'-0"

J M WILLIAMS and Associates
2875 South Decker Lake Drive, Suite 275, Salt Lake City, Utah 84119 • 801.575.6455
Structural Engineering

LIGHT POLE FOOTING

SNAP SPORT
2330 W CALIFORNIA
SALT LAKE CITY, UTAH

SCALE:	NTS
DATE:	5-20-09
DRAWN BY:	JSM
JOB NO.	09028
FILE:	09028-LPF

SHEET NO. LPF

Revision: 1

Date: 5/9/05

SnapCourt™ Multi-Sport Court Light System

System Options:

400-Watt Single and 400-Watt Double
1000-Watt Single

Electrical Requirements:

Multi-Volt Ballast:

120 Volt
208 Volt
240 Volt
277 Volt (Factory Wired)

Fixture Attributes:

400-Watt Metal Halide Fixture:

Size:	16" x 16" x 6.5"
Color:	Black powder Coat Finish
Adjust:	360° Swivel, 180° Pivot

1000-Watt Metal Halide Fixture:

Size:	22" x 22" x 9.5"
Color:	Black powder Coat Finish
Adjust:	360° Swivel, 180° Pivot

System Size:

Lower Pole - 3-1/2" x 3-1/2" x 10' 6" Steel Square Pole
Upper Pole - 3-1/2" x 3-1/2" x 7' Steel Square Pole
Total System Height – 17' 6" From Ground To Top Of Fixture

Color:

Semi-Gloss Black Vein Powder Coat Finish

Net Adjustment Locations:

Paddle Tennis:	36"
Badminton:	62"
Women's Volleyball:	88"
Men's Volleyball:	96"

Anchor System:

Patent Pending – 3" x 3" x 42" Internal Support Post

Optional Accessories:

Multi-Sport Net Adjustment System
400-Watt and 1000-Watt Light Shields

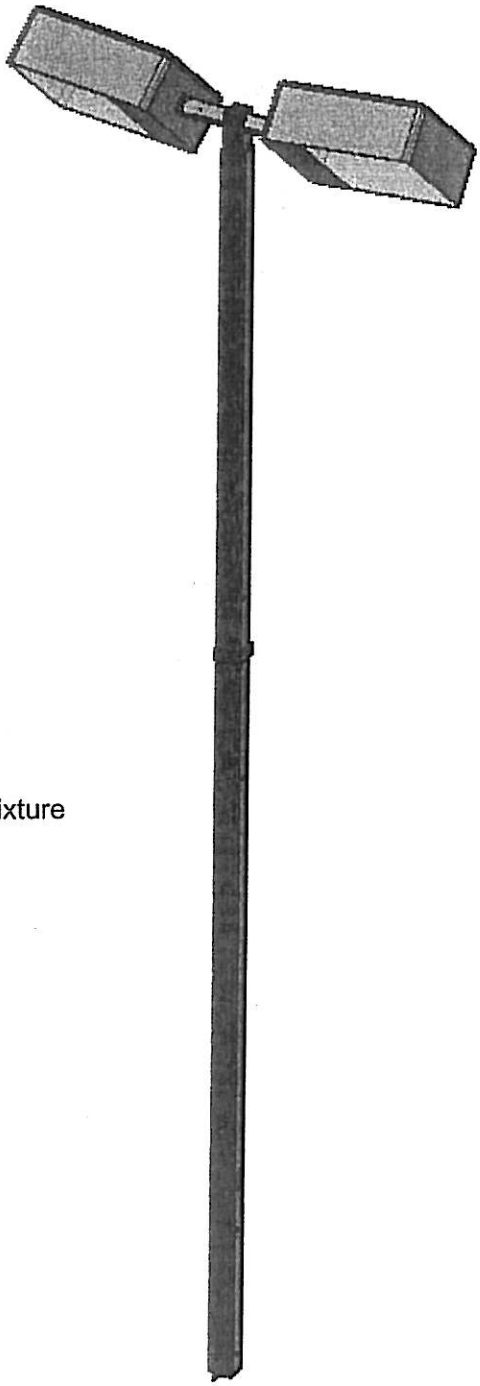

400-Watt Double Light System Shown

SnapCourt, L.L.C. 1735 South 900 West Salt Lake City, Utah 84104 • Phone (801) 746-7555 • Fax (801) 746-7559

J.M. WILLIAMS and ASSOCIATES • Structural Engineering
2875 South Decker Lake Drive - Suite 275 - Salt Lake City, Utah 84119
Phone: 801.575.6455 - Fax: 801.575.6456 - Web: jmwa.com

PROJECT	DATE	SHEET OF
SNAP SPORT	DESIGNED BY JSM	JOB NO.

LIGHT POLE

→ WIND = 20.8 psf (SEE ATTACHED)

POLE

3½" ⌀ POLE

∴ w_{pole} = 20.8 psf $\left(\frac{3\frac{1}{2}}{12}\right)$ = 6.1 plf

FIXTURE

(2) 16"x16"

∴ w_{fix} = 20.8 psf (1.33 ft)² (2) = 73.6 #

M_{max} = 2.23 K-FT

— SOFS COMP OUTPUT —

∴ USE 24"φ x 4'-0" DEEP
W/ (4) #5 AND #3 TIES
@ 12" O.C.

CHECK ANCHOR PIPE

PIPE = 3 x 3 x 3/16 T.S.

S_x = 1.73 in³

M_{ALLOW} = $S_x F_b$ = 1.73 in³ (.6)(46 ksi) = 47.7 K-in = 4.0 K-ft > 2.23 K-ft

∴ OK

JM Williams and Assoc
2875 S Decker Lake Dr.
Suite 275
Salt Lake City, UT 84119
801-575-6455 (phone)
801-575-6456 (fax)

Title :
Dsgnr:
Project Desc.:

Project Notes :

Job #

Printed: 19 MAY 2009, 3:34PM

Pole Embedded in Soil

ENERCALC, INC. 1983-2008, Ver: 6.0.21

Lic. # : KW-06007096 License Owner : jm williams & associates inc

Description : light pole base

General Information

Code References: 2006 IBC 1805.7.2, 1997 UBC 1806.8.2.1

Pole Shape	Circular
Pole Diameter	24.0 in
Calculate Min. Depth for Allowable Pressures	
No Lateral Restraint at Ground Surface	
Allow Passive	250.0 pcf
Max Passive	1,500.0 psf

Controlling Values

Governing Load Combination : +D+W+H

Lateral Load	0.18075 k
Moment	2.2291 k-ft

NO Ground Surface Restraint

Pressures at 1/3 Depth

Actual	**291.022** psf
Allowable	**292.481** psf

Minimum Required Depth	**3.6250 ft**

Footing Base Area	3.1416 ft^2
Maximum Soil Pressure	0.0 ksf

Assumes pole is square

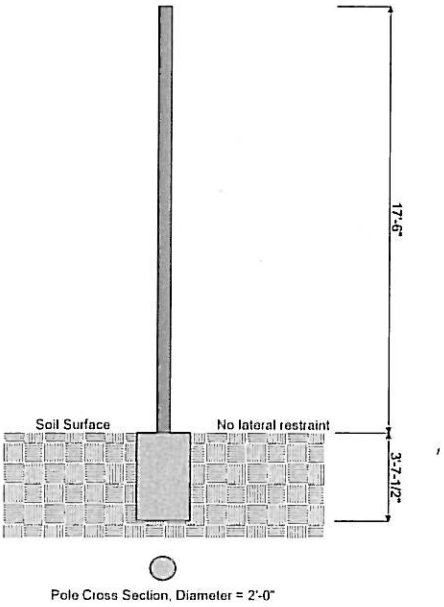

Applied Loads

Lateral Concentrated Load		Lateral Distributed Load	Applied Moment	Vertical Load
D : Dead Load	k	k/ft	k-ft	k
Lr : Roof Live	k	k/ft	k-ft	k
L : Live	k	k/ft	k-ft	k
S : Snow	k	k/ft	k-ft	k
W : Wind	0.0740 k	.00610 k/ft	k-ft	k
E : Earthquake	k	k/ft	k-ft	k
H : Lateral Earth	k	k/ft	k-ft	k
Load distance above Base	17.50 ft	TOP of Load above ground 17.50 ft		
		BOTTOM of Load above ground ft		

Load Combination Results

Load Combination	Forces @ Ground Surface Loads - (k)	Moments - (ft-k)	Required Depth - (ft)	Pressure at 1/3 Depth Actual - (psf)	Allow - (psf)
+D+L+H	0.0	0.0	0.13	0.0	0.0
+D+Lr+H	0.0	0.0	0.13	0.0	0.0
+D+W+H	0.2	2.2	3.63	291.0	292.5
+D+0.750Lr+0.750L+0.750W+H	0.1	1.7	3.25	262.4	264.1
+D+0.750L+0.750S+0.750W+H	0.1	1.7	3.25	262.4	264.1
+0.60D+W+H	0.2	2.2	3.63	291.0	292.5

J. M. WILLIAMS and ASSOCIATES - STRUCTURAL ENGINEERING
2875 South Decker Lake Drive - Suite 275 - Salt Lake City, Utah, 84119
Phone: 801-575-6455 - Fax: 801-575-6456 - Web: jmwa.com

PROJECT:	DATE: 19-May-09	SHEET:
SNAP SPORTS	DESIGNED BY: JSM	JOB NO.:

WIND LOAD

PER ASCE 7-05 (IBC '06, SECTION 1609)

LIGHT POLE

Building Dimensions and Characteristics

Building Height	h = 17.5 ft	
Building Width	B = 0.5 ft	
Building Length	L = 1 ft	
Building Period	$T = C_t h_n^{\,x}$	(Eq. 12.8-7)
	T = 0.28	
	C_t = 0.028	(Table 12.8-2)
	x = 0.8	(Table 12.8-2)
Building Natural Frequency	$n_1 = \frac{1}{T}$	
	n_1 = 3.62 > 1.0	This building is a Rigid Structure

Wind Speed and Factors

Basic Wind Speed	V = 110 mph	
Importance Factor	I_w = 1.00	(Table 6-1)
Exposure Category	C	
Height Above Ground Level	z = 17.5 ft	
	z_g = 900 ft	(Table 6-2)
	a = 9.5	(Table 6-2)
Wind Directionality Factor	K_d = 0.85	(Table 6-4)
Velocity Pressure Exposure Coefficients	$K_z = 2.01\left(\frac{z}{z_g}\right)^{\frac{2}{a}}$	
	K_z = 0.88	
	$K_h = 2.01\left(\frac{h}{z_g}\right)^{\frac{2}{a}}$	
	K_h = 0.88	
Topographical Factor	$K_{zt} = (1 + K_1 + K_2 + K_3)^2$	
	K_1 = 0.0	(Figure 6-4)
	K_2 = 0.0	(Figure 6-4)
	K_3 = 0.0	(Figure 6-4)
	K_{zt} = 1.0	(Eq. 6-3)

J. M. WILLIAMS and ASSOCIATES - STRUCTURAL ENGINEERING
2875 South Decker Lake Drive - Suite 275 - Salt Lake City, Utah, 84119
Phone: 801-575-6455 - Fax: 801-575-6456 - Web: jmwa.com

PROJECT:	DATE: 19-May-09	SHEET:
SNAP SPORTS	DESIGNED BY: JSM	JOB NO.: 0

Gust Effect Factor

$c = 0.20$ (Table 6-2)

$Z_{min} = 15.0$ ft (Table 6-2)

$\bar{Z} = 0.6h > Z_{min}$

$\bar{Z} = 15$ ft

$\bar{\epsilon} = 0.20$ (Table 6-2)

$l = 500$ ft (Table 6-2)

$$I_{\bar{Z}} = c\left(\frac{33}{\bar{Z}}\right)^{\frac{1}{6}}$$ (Eq. 6-5)

$I_{\bar{Z}} = 0.23$

$$L_{\bar{Z}} = l\left(\frac{\bar{Z}}{33}\right)^{\bar{\epsilon}}$$ (Eq. 6-7)

$L_{\bar{Z}} = 427.1$

$$Q = \sqrt{\frac{1}{1+0.63\left(\frac{B+h}{L_{\bar{Z}}}\right)^{0.63}}}$$ (Eq. 6-6)

$Q = 0.96$

$g_Q = 3.4$

$g_V = 3.4$

$$g_R = \sqrt{2\ln(3600n_1)} + \frac{0.577}{\sqrt{2\ln(3600n_1)}}$$ (Eq. 6-9)

$g_R = 4.49$

$\bar{b} = 0.65$ (Table 6-2)

$\bar{a} = 0.15$ (Table 6-2)

$$\bar{V}_{\bar{Z}} = \bar{b}\left(\frac{\bar{Z}}{33}\right)^{\bar{a}} V\left(\frac{88}{60}\right)$$ (Eq. 6-14)

$\bar{V}_{\bar{Z}} = 92.9$

$$N_1 = \frac{n_1 L_{\bar{Z}}}{\bar{V}_{\bar{Z}}}$$ (Eq. 6-12)

$N_1 = 16.6$

$$R_n = \frac{7.47N_1}{(1+10.3N_1)^{\frac{5}{3}}}$$ (Eq. 6-11)

$R_n = 0.02$

J. M. WILLIAMS and ASSOCIATES - STRUCTURAL ENGINEERING
2875 South Decker Lake Drive - Suite 275 - Salt Lake City, Utah, 84119
Phone: 801-575-6455 - Fax: 801-575-6456 - Web: jmwa.com

PROJECT:	DATE: 19-May-09	SHEET:
SNAP SPORTS	DESIGNED BY: JSM	JOB NO.: 0

$$\eta_h = \frac{4.6 n_1 h}{\overline{V}_{\bar{z}}}$$

η_h = 3.14

$$\eta_B = \frac{4.6 n_1 EB}{\overline{V}_{\bar{z}}}$$

η_B = 0.09

$$\eta_L = \frac{15.4 n_1 L}{\overline{V}_{\bar{z}}}$$

η_L = 0.6

$$R_h = \frac{1}{\eta_h} - \frac{1}{2\eta_h^2}\left(1 - e^{-2\eta_h}\right)$$ (Eq. 6-13a)

R_h = 0.27

$$R_B = \frac{1}{\eta_B} - \frac{1}{2\eta_B^2}\left(1 - e^{-2\eta_B}\right)$$ (Eq. 6-13a)

R_B = 0.94

$$R_L = \frac{1}{\eta_L} - \frac{1}{2\eta_L^2}\left(1 - e^{-2\eta_L}\right)$$ (Eq. 6-13a)

R_L = 0.70

Damping Ratio, % of critical β = 0.01

$$R = \sqrt{\frac{1}{\beta} R_n R_h R_B \left(0.53 + 0.47 R_L\right)}$$ (Eq. 6-10)

R = 0.71

Gust Factor (Rigid Structure)

$$G = 0.925\left(\frac{1 + 1.7 g_Q I_{\bar{z}} Q}{1 + 1.7 g_V I_{\bar{z}}}\right)$$ (Eq. 6-4)

G = 0.90

Gust Factor (Flexible Structure)

$$G_f = 0.925\left(\frac{1 + 1.7 I_{\bar{z}} \sqrt{g_Q^2 Q^2 + g_R^2 R^2}}{1 + 1.7 g_V I_{\bar{z}}}\right)$$ (Eq. 6-8)

G_f = 1.10

Velocity Pressure

$$q_z = 0.00256 K_z K_{zt} K_d V^2 I$$ (Eq. 6-15)

q_z = 23.09 lb/ft^2

$$q_h = 0.00256 K_h K_{zt} K_d V^2 I$$ (Eq. 6-15)

q_h = 23.09 lb/ft^2

J. M. WILLIAMS and ASSOCIATES - STRUCTURAL ENGINEERING
2875 South Decker Lake Drive - Suite 275 - Salt Lake City, Utah, 84119
Phone: 801-575-6455 - Fax: 801-575-6456 - Web: jmwa.com

PROJECT:	DATE: 19-May-09	SHEET:
SNAP SPORTS	DESIGNED BY: JSM	JOB NO.: 0

Internal Pressure Coefficient $GC_{pi} = \pm 0.18$ (Figure 6-5)

External Pressure Coefficient $C_p = 0.8$ (Figure 6-6)

Design Wind Load

Rigid Structure $p = qGC_p - q_i(GC_{pi})$ (Eq. 6-17)
$p = 20.8$ lb/ft^2

Flexible Structure $p = qG_FC_p - q_i(GC_{pi})$ (Eq. 6-19)
$p = 24.6$ lb/ft^2